Cloud Computing Notes

Introduction to Cloud Computing

Cloud Computing has fundamentally changed how businesses and individuals store, access, and manage data. It is a technology that allows you to use data and applications over the internet, moving beyond the limitations of a local computer's hard drive or a private server. But to truly understand its impact, we must first look at the problems it solved.

Cloud Computing is a technology that allows you to store and access data and applications over the internet instead of using your computer's hard drive or a local server.

Centralized vs Distributed System

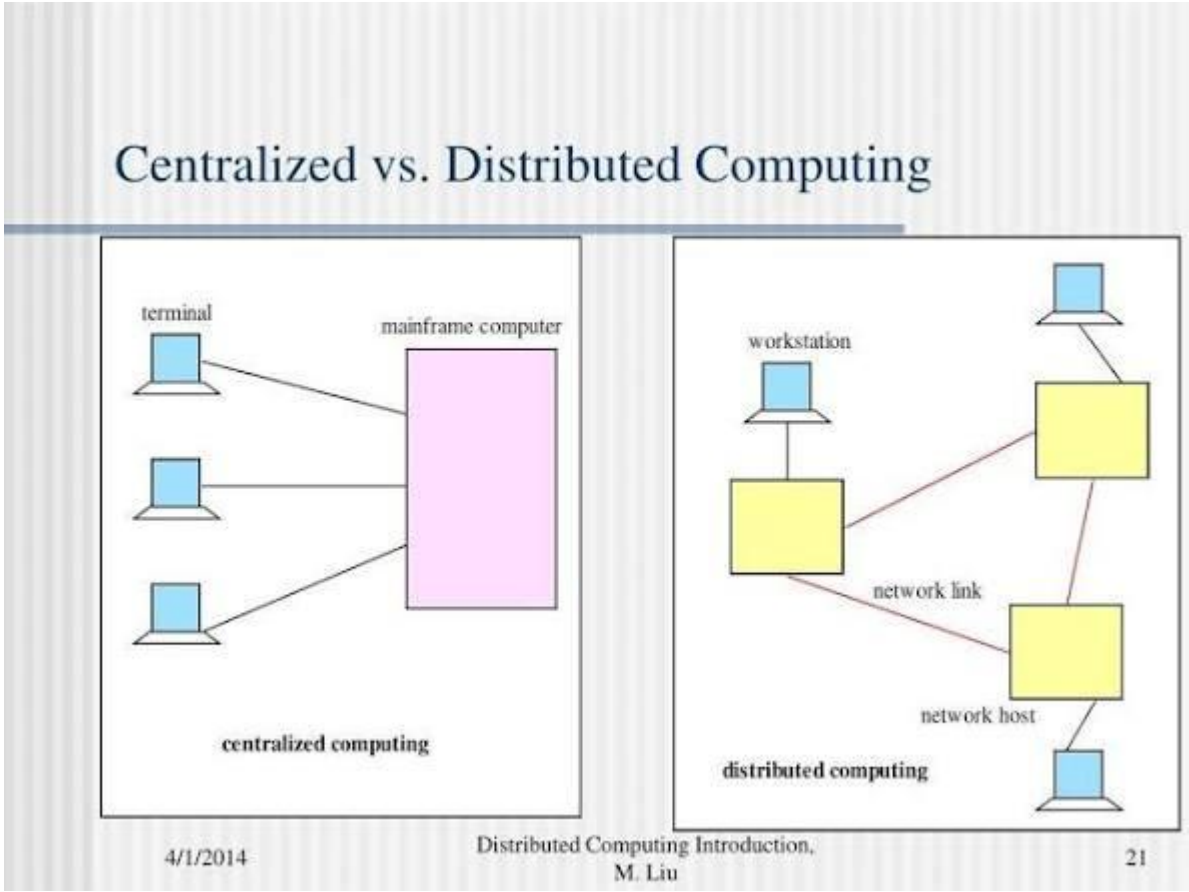

It is essential to understand the differences between centralized and distributed systems. Centralized systems have a single, central point of control, like a hub controlling all the activities. For instance, a school administration office manages all the classrooms and teachers. On the other hand, distributed systems are like a team of equals, with no single point of control. Each part of the system can operate independently, yet they work together

seamlessly, like computers connected to each other. This article highlights their importance in various applications and their differences in effective system design and management.

What is a Centralized System?

A centralized system is a type of system where all the important tasks like processing data, storing information, and making decisions are done by a single main computer or server. This means that there is one central place that controls and manages all the resources and important choices for the whole system. In such systems, all resources, data, and functionalities are managed and controlled from this central point.

Characteristics of Centralized Systems

- **Single Point of Control:** In a centralized system, there is a single point of control and authority. This central entity typically makes all decisions and manages all resources.
- **Centralized Data Management:** All data and resources are stored and managed centrally. This means that all data processing, storage, and retrieval activities occur within the central system.
- **Hierarchical Structure:** Centralized systems often have a hierarchical structure, with lower-level nodes or entities reporting to and receiving instructions from the central authority.
- **Communication Flow:** Communication within a centralized system typically flows from peripheral nodes or entities to the central node.
- **Simplicity in Management:** Centralized systems are relatively simpler to manage and administer since all control and decision-making are centralized. This can lead to efficient coordination and streamlined operations.

For Example:

Many businesses operate with centralized IT infrastructures where data centers or servers centrally manage resources such as file storage, application hosting, and network services.

Use Cases of Centralized Systems

- **Small Office Network:** Many offices use one main computer to run things. This main computer stores files for all workers. It also helps computers access the network. The main computer checks workers are who they say. Using one main computer makes it simpler to manage everything. It also allows all workers to use things the same way.
- **Traditional Client-Server Architecture:** A lot of older programs like email, websites, and databases work one way. Clients talk to one main server to get what they need. This setup has a center. Computers connect to the main spot to get services or info.

- **Standalone Applications:** Apps running on one machine do everything locally. They process and store things without needing other machines. This is a centralized system. All the work happens on the single machine you are using.

What is a Distributed System?

In a distributed system, different parts of a computer system are located on different computers or devices that are connected together. Each computer or device can work by itself, but they all work together to do things like process information, store data, or provide services.

- It's kind of like having a team of people working on the same project, but each person is in a different place and has their own task to do.
- But they all communicate and share information with each other to make sure the whole project gets done correctly and efficiently.

Characteristics of Distributed Systems

- **Decentralized Control:** In a distributed system, control and decision-making authority are decentralized. Each node in the system has a degree of autonomy and can make decisions independently based on local information.
- **Distributed Data Management:** Data and resources are distributed across multiple nodes in the system. Each node may store a subset of the data or perform specific tasks, contributing to the overall functionality of the system.
- **Peer-to-Peer Communication:** Communication in a distributed system can occur directly between nodes without the need for a central intermediary. Nodes can exchange information, coordinate actions, and collaborate to achieve shared objectives.
- **Fault Tolerance:** Distributed systems are often designed to be resilient to failures. Since there is no single point of failure, the system can continue to operate even if individual nodes experience issues or failures.
- **Scalability:** Distributed systems can be highly scalable, allowing for the addition of new nodes to accommodate increased workload or user demand. This scalability is achieved through the parallelization of tasks across multiple nodes.

For Example:

Content Delivery Networks(CDNs) distribute content such as web pages, images, and videos across geographically dispersed servers. By caching content closer to end-users, CDNs improve performance, reduce latency, and increase reliability.

Use Cases of Distributed Systems

- **Cloud Computing Platforms:** Cloud services share resources over data centers. This lets them offer computing on demand. AWS, Azure, GCP are examples.
- **Peer-to-Peer (P2P) Networks:** Peer-to-peer networks are special kinds of computer networks that allow direct communication between computers without needing a central server. These networks work by letting each computer share its resources and services with other computers on the network
- **Distributed Databases:** Distributed databases are computer systems that store information across several computers or nodes linked together in a network. Having data spread out like this makes the database highly available, fault-tolerant, and scalable. This means the database can handle many users and requests without crashing or slowing down. It also allows the system to keep working even if some parts fail.

overview distributed computing

Distributed computing links multiple independent computers over a network to act as a single, powerful system, sharing tasks and resources to solve complex problems faster and more reliably than a single machine. It offers scalability, fault tolerance, and efficiency, enabling large-scale tasks like rendering videos, powering cloud services, and running blockchains by coordinating message-passing between nodes (computers).

Key Concepts & Characteristics

- **Single System Image:** Appears as one coherent system to users, hiding underlying complexity.
- **Concurrency:** Components run simultaneously on different machines.
- **No Global Clock:** Each node has its own time, requiring careful coordination.
- **Independent Failures:** One node failing doesn't necessarily stop the whole system (fault tolerance).
- **Message Passing:** Nodes communicate by sending messages, not by sharing memory.

Benefits

- **Scalability:** Easily add more machines (nodes) to handle increased load (scale-out).
- **Performance:** Parallel processing speeds up complex tasks.
- **Reliability/Redundancy:** If one machine fails, others take over; no single point of failure.
- **Cost-Effectiveness:** Uses cheaper, commodity hardware instead of expensive mainframes.

Common Examples & Applications

- **Cloud Computing:** AWS, Google Cloud use distributed systems for on-demand resources.
- **Content Delivery Networks (CDNs):** Distribute content globally (e.g., Cloudflare).
- **Peer-to-Peer (P2P) Networks:** File sharing (BitTorrent) or cryptocurrencies (Bitcoin).
- **Big Data Processing:** Hadoop (HDFS) for massive datasets.
- **Blockchain:** Decentralized, replicated ledgers (Bitcoin, Ethereum).

How it Works (e.g., Video Rendering)

1. A large task (render a video) is split into smaller pieces (frames).
2. These pieces are sent to different computers (nodes) over a network.
3. Each node processes its piece.
4. Results are reassembled into the final product.

An Overview of Cluster Computing

Introduction :
Cluster computing is a collection of tightly or loosely connected computers that work together so that they act as a single entity. The connected computers execute operations all together thus creating the idea of a single system. The clusters are generally connected through fast local area networks (LANs)

Cluster Computing

Image insert

Why is Cluster Computing important?

1. Cluster computing gives a relatively inexpensive, unconventional to the large server or mainframe computer solutions.
2. It resolves the demand for content criticality and process services in a faster way.
3. Many organizations and IT companies are implementing cluster computing to augment their scalability, availability, processing speed and resource management at economic prices.
4. It ensures that computational power is always available.
5. It provides a single general strategy for the implementation and application of parallel high-performance systems independent of certain hardware vendors and their product decisions.

A Simple Cluster Computing Layout

Types of Cluster computing

1. High performance (HP) clusters :
HP clusters use computer clusters and supercomputers to solve advance computational problems. They are used to performing functions that need nodes to communicate as they perform their jobs. They are designed to take benefit of the parallel processing power of several nodes.

2. Load-balancing clusters :

Incoming requests are distributed for resources among several nodes running similar programs or having similar content. This prevents any single node from receiving a disproportionate amount of task. This type of distribution is generally used in a web-hosting environment.

3. High Availability (HA) Clusters :

HA clusters are designed to maintain redundant nodes that can act as backup systems in case any failure occurs. Consistent computing services like business activities, complicated databases, customer services like e-websites and network file distribution are provided. They are designed to give uninterrupted data availability to the customers.

Classification of Cluster :

1. Open Cluster :

IPs are needed by every node and those are accessed only through the internet or web. This type of cluster causes enhanced security concerns.

2. Close Cluster :

The nodes are hidden behind the gateway node, and they provide increased protection. They need fewer IP addresses and are good for computational tasks.

Cluster Computing Architecture :

- It is designed with an array of interconnected individual computers and the computer systems operating collectively as a single standalone system.
- It is a group of workstations or computers working together as a single, integrated computing resource connected via high speed interconnects.
- A node – Either a single or a multiprocessor network having memory, input and output functions and an operating system.
- Two or more nodes are connected on a single line or every node might be connected individually through a LAN connection.

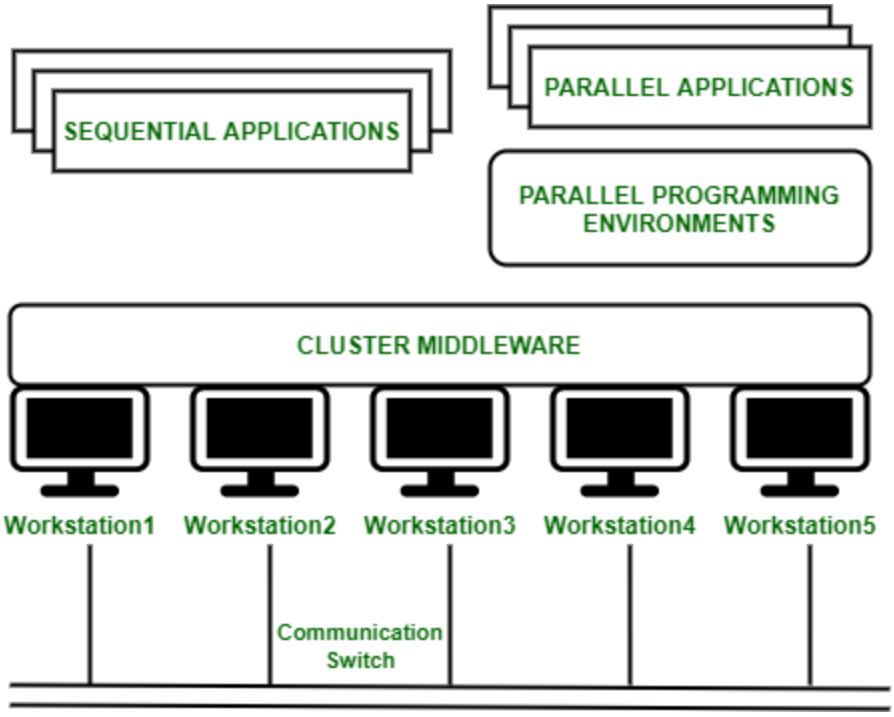

Cluster Computing Architecture

Components of a Cluster Computer :

1. Cluster Nodes
2. Cluster Operating System
3. The switch or node interconnect
4. Network switching hardware

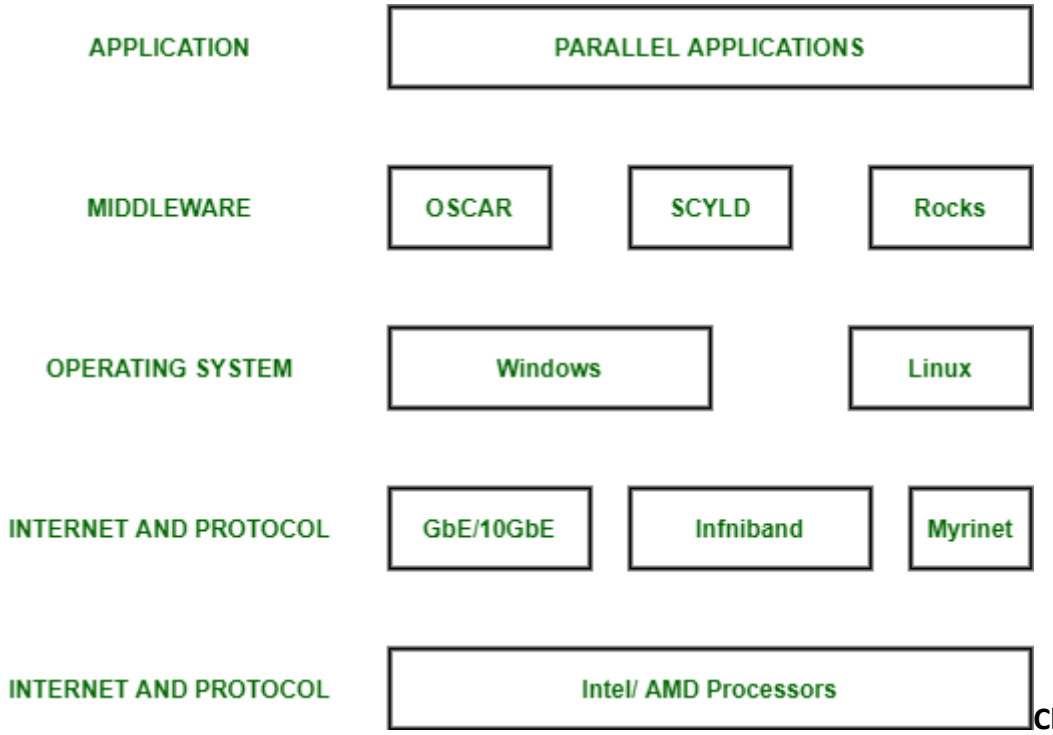

Cluster Components

Advantages of Cluster Computing :

1. High Performance :

The systems offer better and enhanced performance than that of mainframe computer networks.

2. Easy to manage :

Cluster Computing is manageable and easy to implement.

3. Scalable :

Resources can be added to the clusters accordingly.

4. Expandability :

Computer clusters can be expanded easily by adding additional computers to the network. Cluster computing is capable of combining several additional resources or the networks to the existing computer system.

5. Availability :

The other nodes will be active when one node gets failed and will function as a proxy for the failed node. This makes sure for enhanced availability.

6. Flexibility :

It can be upgraded to the superior specification or additional nodes can be added.

Disadvantages of Cluster Computing :

1. High cost :

It is not so much cost-effective due to its high hardware and its design.

2. Problem in finding fault :

It is difficult to find which component has a fault.

3. More space is needed :

Infrastructure may increase as more servers are needed to manage and monitor.

Applications of Cluster Computing :

- Various complex computational problems can be solved.
- It can be used in the applications of aerodynamics, astrophysics and in data mining.
- Weather forecasting.
- Image Rendering.
- Various e-commerce applications.
- Earthquake Simulation.
- Petroleum reservoir simulation.

Grid Computing

Grid computing is a distributed architecture that combines computer resources from different locations to achieve a common goal. It breaks down tasks into smaller subtasks, allowing concurrent processing. In this article, we are going to discuss grid computing.

What is Grid Computing?

Grid Computing can be defined as a network of computers working together to perform a task that would rather be difficult for a single machine. All machines on that network work under the same protocol to act as a virtual supercomputer. The tasks that they work on may include analyzing huge datasets or simulating situations that require high computing power. Computers on the network contribute resources like processing power and storage capacity to the network.

Grid Computing is a subset of distributed computing, where a virtual supercomputer comprises machines on a network connected by some bus, mostly Ethernet or sometimes the Internet. It can also be seen as a form of Parallel Computing where instead of many CPU cores on a single machine, it contains multiple cores spread across various locations. The concept of grid computing isn't new, but it is not yet perfected as there are no standard rules and protocols established and accepted by people.

Why is Grid Computing Important?

- **Scalability**: It allows organizations to scale their computational resources dynamically. As workloads increase, additional machines can be added to the grid, ensuring efficient processing.
- **Resource Utilization**: By pooling resources from multiple computers, grid computing maximizes resource utilization. Idle or underutilized machines contribute to tasks, reducing wastage.
- **Complex Problem Solving**: Grids handle large-scale problems that require significant computational power. Examples include climate modeling, drug discovery, and genome analysis.
- **Collaboration**: Grids facilitate collaboration across geographical boundaries. Researchers, scientists, and engineers can work together on shared projects.
- **Cost Savings**: Organizations can reuse existing hardware, saving costs while accessing excess computational resources. Additionally, cloud resources can be cost-effectively.

Working of Grid Computing

A Grid computing network mainly consists of these three types of machines

- **Control Node:** A computer, usually a server or a group of servers which administrates the whole network and keeps the account of the resources in the network pool.
- **Provider:** The computer contributes its resources to the network resource pool.
- **User:** The computer that uses the resources on the network.

When a computer makes a request for resources to the control node, the control node gives the user access to the resources available on the network. When it is not in use it should ideally contribute its resources to the network. Hence a normal computer on the node can swing in between being a user or a provider based on its needs. The nodes may consist of machines with similar platforms using the same OS called homogeneous networks, else machines with different platforms running on various different OSs called heterogeneous networks. This is the distinguishing part of grid computing from other distributed computing architectures. For controlling the network and its resources a software/networking protocol is used generally known as **Middleware**. This is responsible

for administrating the network and the control nodes are merely its executors. As a grid computing system should use only unused resources of a computer, it is the job of the control node that any provider is not overloaded with tasks.
The meaning of the term Grid Computing has changed over the years, according to "The Grid: Blueprint for a new computing infrastructure" by Ian Foster and Carl Kesselman published in 1999, the idea was to consume computing power like electricity is consumed from a power grid. This idea is similar to the current concept of cloud computing, whereas now grid computing is viewed as a distributed collaborative network. Currently, grid computing is being used in various institutions to solve a lot of mathematical, analytical, and physics problems.

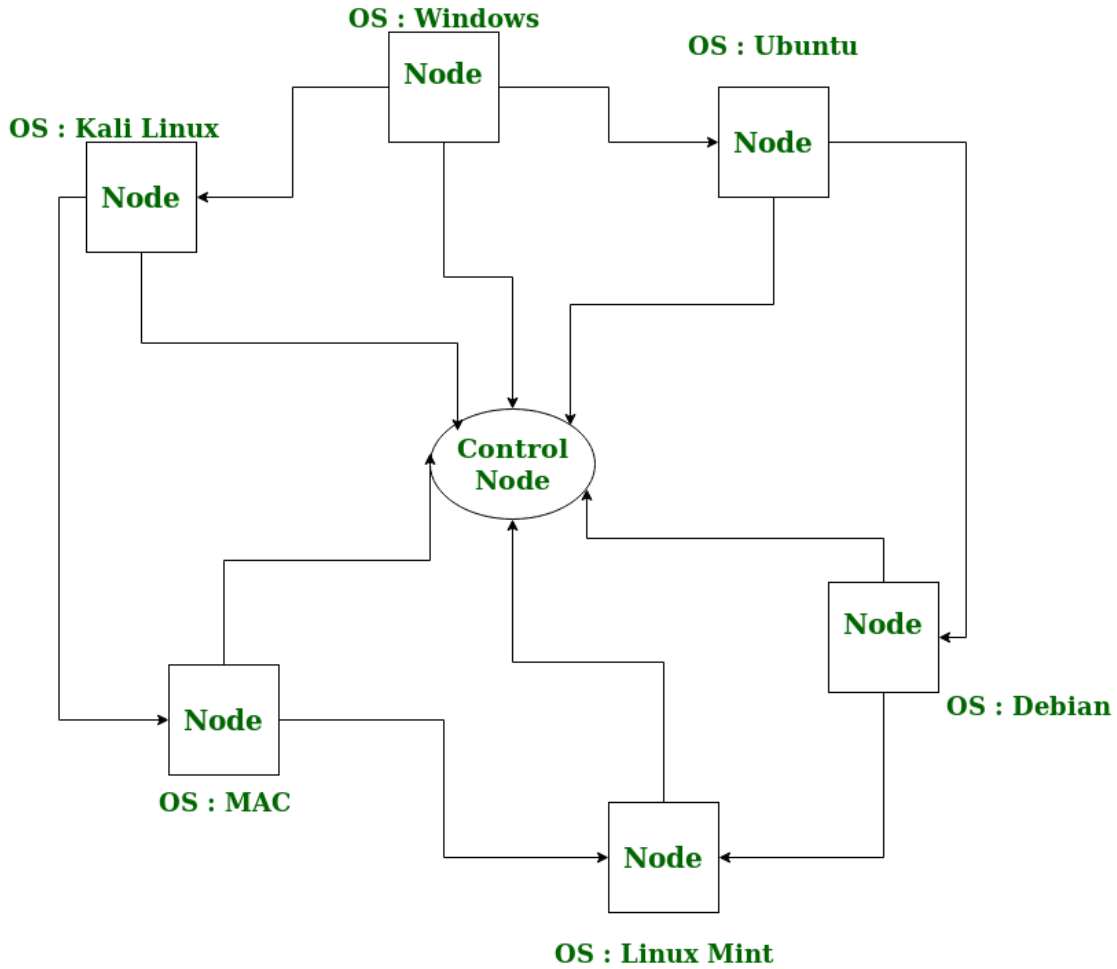

Topology in Grid Computing

What are the Types of Grid Computing?

- **Computational grid:** A computational grid is a collection of high-performance processors. It enables researchers to utilize the combined computing capacity of the machines. Researchers employ computational grid computing to complete resource-intensive activities like mathematical calculations.

- **Scavenging grid:** Similar to computational grids, CPU scavenging grids have a large number of conventional computers. Scavenging refers to the process of searching for available computing resources in a network of normal computers.
- **Data grid:** A data grid is a grid computing network that connects multiple computers together to enable huge amounts of data storage. You can access the stored data as if it were on your local system, without worrying about where it is physically located on the grid.

Use Cases of Grid Computing

- Genomic Research
- Drug Discovery
- Cancer Research
- Weather Forecasting
- Risk Analysis
- Computer-Aided Design (CAD)
- Animation and Visual Effects
- Collaborative Projects

Advantages of Grid Computing

- Grid Computing provide high resources utilization.
- Grid Computing allow parallel processing of task.
- Grid Computing is designed to be scalable.

Disadvantages of Grid Computing

- The software of the grid is still in the evolution stage.
- Grid computing introduce Complexity.
- Limited Flexibility
- Security Risks

Cloud Networking

Cloud Networking

Cloud Networking is the practice of designing, deploying, and managing network resources and services within a cloud computing environment, utilizing virtualized technologies such as Virtual Private Clouds (VPCs), Software-Defined Networking

(SDN), and load balancing to ensure secure, scalable, and efficient connectivity between cloud-based and on-premises systems.

Image add

Cloud Networking Basics

Cloud Networking basics refer to the core principles and components required to establish and manage network resources in a cloud environment. These include:

- **Virtualization:** Creating virtual networks, subnets, and interfaces for flexible resource allocation and isolation.
- **Software-Defined Networking (SDN):** Centralized control and automation of network configurations to improve agility and scalability.
- **Virtual Private Clouds (VPCs):** Isolated network environments with custom IP ranges, subnets, and route tables for enhanced security and control.
- **Monitoring and Optimization:** Using tools to track traffic, detect bottlenecks, and optimize performance and resource utilization.
- **Load Balancing:** Distributing traffic across multiple servers to ensure performance, scalability, and fault tolerance.

Types Of Cloud Networking

The following are the types of cloud networking:

1. Single Cloud Networking

Cloud Networking comes with utilizes virtualized networking technologies to manage network resources within a cloud environment, providing scalability and centralized management.

- **Virtualized Infrastructure:** It involves utilization of virtualized networking technologies for creating and managing the network resources over the cloud.
- **Scalability And Flexibility:** Cloud Networking offers flexibility and scalability for organzations to dynamically adjust their network configurations to meet up their changing demands.
- **Centralized Management:** It provides centralized management and automation of network configurations for enhancing agility and reducing administrative overhead.

2. Multi Cloud Networking

Multi Cloud Networking comes with facilitating connectivity and traffic distribution over multiple cloud service platforms with ensuring interoperability and security across diverse multi cloud environments. The following are its functionalities:

- **Interoperability**: Facilitates connectivity and communication between multiple cloud environments and on-premises infrastructure.
- **Traffic Distribution**: Enables load balancing and traffic routing across diverse cloud platforms to optimize performance and resource utilization.
- **Security and Compliance**: Implements consistent security policies and compliance measures across multiple clouds, ensuring data protection and regulatory compliance.

3. Hybrid Cloud Networking

Hybrid Cloud Networking comes with involving integration of on-premises infrastructure with public and private cloud environments. It provides seamless data flexibility with hybrid connectivity.

- **Integration Of Environments**: It develops a single network based architecture with linking public and private cloud environments with on premised infrastructure.
- **Data Mobility:** It helps with smoother transfer of workloads and data in between on-premise and cloud environments. It facilitates with resource optimization and agility.

Cloud Networking Services Examples

The following are the Cloud Networking Services Examples:

- **Virtual Private Networking (VPN) In the Cloud:** Setting the VPN services within the cloud environments helps for securing remote access and transfer the data.
- **Hub and Spoke Network Topology**: Establishment of Hub and spoke technology helps in centralizing the traffic management and in optimizing the resource utilization.
- **Software-Defined Networking (SDN):** On usage of SDN technologies facilitates in dynamically manage and configure the network infrastructure in cloud environments for improving agility and scalability.

Use Cases Of Cloud Networking Services

The following are the use cases of Cloud Networking Services:

- **Extended On-premises Networks:** It facilitates with seamless integration of on-premise network infrastructure with cloud environments using VPNs for having secured communication and resource access.

- **Automated Network Security:** Implementing automated network security facilitates with automatic patch deployment and having enforced policy-based security measures.
- **Traffic Inspection and Cloud Management:** Implementation of hub-spoke network topology helps in efficiently managing the network traffic and fulfilling resource based specific needs such as isolation of customers for compliance or performance reasons.

Cloud Computing Vs Cloud Networking

The following is the comparison table of cloud computing and cloud networking:

Benefits of Cloud Networking

- **On-Demand Service:** Quick access to applications and resources without manual intervention.
- **High Scalability:** Easily adjusts resources to meet changing demands.
- **Agility:** Efficient resource sharing and fast performance.
- **Cost Efficiency:** Pay-per-use model reduces overall expenses.
- **High Availability & Reliability:** Ensures consistent uptime and dependable access

Disadvantages of Cloud Networking

- **Security Risks:** Vulnerable to cyber-attacks and data breaches.
- **Internet Dependency:** Requires stable connectivity for reliable performance.
- **Limited Control:** Provider-managed infrastructure reduces user control.
- **High Costs:** Ongoing expenses can be significant for large enterprises.
- **Limited Customization:** Pre-configured solutions may not fit spec

Cloud Networking is the practice of designing, deploying, and managing network resources and services within a cloud computing environment, utilizing virtualized technologies such as Virtual Private Clouds (VPCs), Software-Defined Networking (SDN), and load balancing to ensure secure, scalable, and efficient connectivity betwee

Cloud Networking Basics

Cloud Networking basics refer to the core principles and components required to establish and manage network resources in a cloud environment. These include:

- **Virtualization:** Creating virtual networks, subnets, and interfaces for flexible resource allocation and isolation.
- **Software-Defined Networking (SDN):** Centralized control and automation of network configurations to improve agility and scalability.
- **Virtual Private Clouds (VPCs):** Isolated network environments with custom IP ranges, subnets, and route tables for enhanced security and control.
- **Monitoring and Optimization:** Using tools to track traffic, detect bottlenecks, and optimize performance and resource utilization.
- **Load Balancing:** Distributing traffic across multiple servers to ensure performance, scalability, and fault tolerance.

Types Of Cloud Networking

The following are the types of cloud networking:

1. Single Cloud Networking

Cloud Networking comes with utilizes virtualized networking technologies to manage network resources within a cloud environment, providing scalability and centralized management.

- **Virtualized Infrastructure:** It involves utilization of virtualized networking technologies for creating and managing the network resources over the cloud.
- **Scalability And Flexibility:** Cloud Networking offers flexibility and scalability for organzations to dynamically adjust their network configurations to meet up their changing demands.
- **Centralized Management:** It provides centralized management and automation of network configurations for enhancing agility and reducing administrative overhead.

2. Multi Cloud Networking

Multi Cloud Networking comes with facilitating connectivity and traffic distribution over multiple cloud service platforms with ensuring interoperability and security across diverse multi cloud environments. The following are its functionalities:

- **Interoperability**: Facilitates connectivity and communication between multiple cloud environments and on-premises infrastructure.
- **Traffic Distribution**: Enables load balancing and traffic routing across diverse cloud platforms to optimize performance and resource utilization.

- **Security and Compliance**: Implements consistent security policies and compliance measures across multiple clouds, ensuring data protection and regulatory compliance.

3. Hybrid Cloud Networking

Hybrid Cloud Networking comes with involving integration of on-premises infrastructure with public and private cloud environments. It provides seamless data flexibility with hybrid connectivity.

- **Integration Of Environments**: It develops a single network based architecture with linking public and private cloud environments with on premised infrastructure.
- **Data Mobility:** It helps with smoother transfer of workloads and data in between on-premise and cloud environments. It facilitates with resource optimization and agility.

Cloud Networking Services Examples

The following are the Cloud Networking Services Examples:

- **Virtual Private Networking (VPN) In the Cloud:** Setting the VPN services within the cloud environments helps for securing remote access and transfer the data.
- **Hub and Spoke Network Topology**: Establishment of Hub and spoke technology helps in centralizing the traffic management and in optimizing the resource utilization.
- **Software-Defined Networking (SDN):** On usage of SDN technologies facilitates in dynamically manage and configure the network infrastructure in cloud environments for improving agility and scalability.

Use Cases Of Cloud Networking Services

The following are the use cases of Cloud Networking Services:

- **Extended On-premises Networks:** It facilitates with seamless integration of on-premise network infrastructure with cloud environments using VPNs for having secured communication and resource access.
- **Automated Network Security:** Implementing automated network security facilitates with automatic patch deployment and having enforced policy-based security measures.
- **Traffic Inspection and Cloud Management:** Implementation of hub-spoke network topology helps in efficiently managing the network traffic and fulfilling resource based specific needs such as isolation of customers for compliance or performance reasons.

Benefits of Cloud Networking

- **On-Demand Service:** Quick access to applications and resources without manual intervention.
- **High Scalability:** Easily adjusts resources to meet changing demands.
- **Agility:** Efficient resource sharing and fast performance.
- **Cost Efficiency:** Pay-per-use model reduces overall expenses.
- **High Availability & Reliability:** Ensures consistent uptime and dependable access

Disadvantages of Cloud Networking

- **Security Risks:** Vulnerable to cyber-attacks and data breaches.
- **Internet Dependency:** Requires stable connectivity for reliable performance.
- **Limited Control:** Provider-managed infrastructure reduces user control.
- **High Costs:** Ongoing expenses can be significant for large enterprises.
- **Limited Customization:** Pre-configured solutions may not fit spec

Distributed Computing System Models

Last Updated : 23 Jul, 2025

-
-
-

Distributed computing is a system where processing and data storage is distributed across multiple devices or systems, rather than handled by a single central device. In this article, we will see Distributed Computing System Models.

Important Topics for Distributed Computing System Models

- Types of Distributed Computing System Models
    - Physical Model
    - Architectural Model
    - Fundamental Model

Types of Distributed Computing System Models

1. Physical Model

A physical model represents the underlying hardware elements of a distributed system. It encompasses the hardware composition of a distributed system in terms of computers and other devices and their interconnections. It is primarily used to design, manage, implement, and determine the performance of a distributed system.

A physical model majorly consists of the following components:

1. Nodes

Nodes are the end devices that can process data, execute tasks, and communicate with the other nodes. These end devices are generally the computers at the user end or can be servers, workstations, etc.

- Nodes provision the distributed system with an interface in the presentation layer that enables the user to interact with other back-end devices, or nodes, that can be used for storage and database services, processing, web browsing, etc.
- Each node has an Operating System, execution environment, and different middleware requirements that facilitate communication and other vital tasks.**,**

2. Links

Links are the communication channels between different nodes and intermediate devices. These may be wired or wireless. Wired links or physical media are implemented using copper wires, fiber optic cables, etc. The choice of the medium depends on the environmental conditions and the requirements. Generally, physical links are required for high-performance and real-time computing. Different connection types that can be implemented are as follows:

- **Point-to-point links:** Establish a connection and allow data transfer between only two nodes.
- **Broadcast links:** It enables a single node to transmit data to multiple nodes simultaneously.
- **Multi-Access links:** Multiple nodes share the same communication channel to transfer data. Requires protocols to avoid interference while transmission.

3. Middleware

These are the softwares installed and executed on the nodes. By running middleware on each node, the distributed computing system achieves a decentralised control and decision-making. It handles various tasks like communication with other nodes, resource management, fault tolerance, synchronisation of different nodes and security to prevent malicious and unauthorised access.

4. Network Topology

This defines the arrangement of nodes and links in the distributed computing system. The most common network topologies that are implemented are bus, star, mesh, ring or hybrid. Choice of topology is done by determining the exact use cases and the requirements.

5. Communication Protocols

Communication protocols are the set rules and procedures for transmitting data from in the links. Examples of these protocols include TCP, UDP, HTTPS, MQTT etc. These allow the nodes to communicate and interpret the data.

2. Architectural Model

Architectural model in distributed computing system is the overall design and structure of the system, and how its different components are organised to interact with each other and provide the desired functionalities. It is an overview of the system, on how will the development, deployment and operations take place. Construction of a good architectural model is required for efficient cost usage, and highly improved scalability of the applications.

The key aspects of architectural model are:

1. Client-Server model

It is a centralised approach in which the clients initiate requests for services and severs respond by providing those services. It mainly works on the request-response model where the client sends a request to the server and the server processes it, and responds to the client accordingly.

- It can be achieved by using TCP/IP, HTTP protocols on the transport layer.
- This is mainly used in web services, cloud computing, database management systems etc.

2. Peer-to-peer model

It is a decentralised approach in which all the distributed computing nodes, known as peers, are all the same in terms of computing capabilities and can both request as well as provide services to other peers. It is a highly scalable model because the peers can join and leave the system dynamically, which makes it an ad-hoc form of network.

- The resources are distributed and the peers need to look out for the required resources as and when required.
- The communication is directly done amongst the peers without any intermediaries according to some set rules and procedures defined in the P2P networks.
- The best example of this type of computing is BitTorrent.

3. Layered model

It involves organising the system into multiple layers, where each layer will provision a specific service. Each layer communicated with the adjacent layers using certain well-defined protocols without affecting the integrity of the system. A hierarchical structure is obtained where each layer abstracts the underlying complexity of lower layers.

4. Micro-services model

In this system, a complex application or task, is decomposed into multiple independent tasks and these services running on different servers. Each service performs only a single function and is focussed on a specific business-capability. This makes the overall system more maintainable, scalable and easier to understand. Services can be independently developed, deployed and scaled without affecting the ongoing services.

3. Fundamental Model

The fundamental model in a distributed computing system is a broad conceptual framework that helps in understanding the key aspects of the distributed systems. These are concerned with more formal description of properties that are generally common in all architectural models. It represents the essential components that are required to understand a distributed system's behaviour. Three fundamental models are as follows:

1. Interaction Model

Distributed computing systems are full of many processes interacting with each other in highly complex ways. Interaction model provides a framework to understand the mechanisms and patterns that are used for communication and coordination among various processes. Different components that are important in this model are -

- **Message Passing -** It deals with passing messages that may contain, data, instructions, a service request, or process synchronisation between different computing nodes. It may be synchronous or asynchronous depending on the types of tasks and processes.
- **Publish/Subscribe Systems -** Also known as pub/sub system. In this the publishing process can publish a message over a topic and the processes that are subscribed to that topic can take it up and execute the process for themselves. It is more important in an event-driven architecture.

2. Remote Procedure Call (RPC)

It is a communication paradigm that has an ability to invoke a new process or a method on a remote process as if it were a local procedure call. The client process makes a procedure call using RPC and then the message is passed to the required server process using communication protocols. These message passing protocols are abstracted and the result once obtained from the server process, is sent back to the client process to continue execution.

1. Failure Model

This model addresses the faults and failures that occur in the distributed computing system. It provides a framework to identify and rectify the faults that occur or may occur in the system. Fault tolerance mechanisms are implemented so as to handle failures by replication and error detection and recovery methods. Different failures that may occur are:

- **Crash failures -** A process or node unexpectedly stops functioning.

- **Omission failures -** It involves a loss of message, resulting in absence of required communication.
- **Timing failures -** The process deviates from its expected time quantum and may lead to delays or unsynchronised response times.
- **Byzantine failures -** The process may send malicious or unexpected messages that conflict with the set protocols.

2. Security Model

Distributed computing systems may suffer malicious attacks, unauthorised access and data breaches. Security model provides a framework for understanding the security requirements, threats, vulnerabilities, and mechanisms to safeguard the system and its resources. Various aspects that are vital in the security model are:

- **Authentication:** It verifies the identity of the users accessing the system. It ensures that only the authorised and trusted entities get access. It involves -
    - **Password-based authentication:** Users provide a unique password to prove their identity.
    - **Public-key cryptography:** Entities possess a private key and a corresponding public key, allowing verification of their authenticity.

    - **Multi-factor authentication:** Multiple factors, such as passwords, biometrics, or security tokens, are used to validate identity.

- **Encryption:**
    - It is the process of transforming data into a format that is unreadable without a decryption key. It protects sensitive information from unauthorized access or disclosure.

- **Data Integrity:**
    - Data integrity mechanisms protect against unauthorised modifications or tampering of data. They ensure that data remains unchanged during storage, transmission, or processing. Data integrity mechanisms include:
        - **Hash functions -** Generating a hash value or checksum from data to verify its integrity.
        - **Digital signatures -** Using cryptographic techniques to sign data and verify its authenticity and integrity.